Knife gate valve BV

Stafsjö
SINCE 1666

Information is only for informational purpose. All specifications are subject to change without notice.

Knife gate valve BV

Stafsjö's knife gate valve BV is bi-directional and tight in both pressure directions. It has been specially developed to handle liquids with solids in suspensions such as sludge, waste water and the difficult bio mass feed stock of bio-energy plants. Its straight through full bore has minimal cavities thtat gives good flow characteristics and minimizes the risk of blockage.
The BV valve is designed of a one piece valve body in cast iron, epoxy coated inside and outside. This version is fully lugged up to size 24" (600 mm) which permits many different flange drillings and end-of-pipe installations. BV is equipped with a gate in stainless steel and a sealing profile in EPDM or Nitril. Stafsjö's unique box packing, Twin-Pack™, gives a tight sealing where the gate exit the valve body and and assures that no media reaches the surrounding environment. The valve is modular designed and it can easily be provided with different actuators and accessories.

Stafsjö's knife gate valve BV is designed, manufactured, inspected and tested according to the European Pressure Equipment Directive (PED 97/23/EC) category I and II module A1. The valve is therefore CE-marked when applicable.

Design data

Sizes	Available flange drillings	Face-to-face dimension	ATEX design
3" - 24"/ 80 mm - 600 mm	**ASME/ANSI B16.5 Class 150** **AS 2129 Table D** **AS 2129 Table E** **EN 1092 PN 10*** **EN 1092 PN 16***	**TAPPI TIS 405 - 8**	**ATEX 94/ 9/EC II cat 3 G/D for zone 2 and 22 on request.**
Other sizes on request	** Not described in this data sheet*		

Leakage rate	Pressure tests
EN 12266-1:2003 Rate A: no visually detectable leakage is allowed for duration of the test	Pressure tests are performed with water at 20° C according to EN 12266-1:2003. Pressure for shell test: 1,5 times maximum allowable working pressure for open valve. Pressure for seat tightness test: 1,1 times maximum allowable differential pressure for closed valve.

Maximum working pressure body at 68°F/20°C		Maximum differential pressure at 68°F/20°C	
Size (inch/mm)	PSI/bar	Size (inch/mm)	PSI/bar
3 - 24/80 - 600	**150**/10	**3**/80	**150**/10
		***4 - 24**/100 mm - 600 mm	**90**/6
		**4" - 10"/100 mm-250 mm:10 bar on request*	

Basic equipment

A. Valve Body		
Material	Type	Max. temperature °F/°C
Cast iron (A)	**EN-JL1040/GG25**	**392**/200

Standard colour: epoxy colour, thickness 140-200µm, RAL 5015.

B. Gate	
Material	Type
Stainless steel	**EN 1.4301/AISI 304/ SS 2333**
Stainless steel	**EN 1.4404/AISI 316L/SS 2348**
Stainless steel, lean duplex	**EN 1.4162/S32101/LDX2101**

C. Sealing profile	
Material	Max. temperature °F/°C
EPDM (E)	**248**/120
Nitril (N)	**212**/100

D. Box Packing		
Material	pH	Maximum temperature °F/°C
TwinPack™ (TY)	**2-13**	**500**/260

Actuators

Manual	Code	Automatic	Code
Hand wheel[1)]	**(HW)**	**Pneumatic cylinder**	**(EC)**
Bevel gear[2)]	**(BG)**	**Electric motor**	**(EM)**
Chain wheel[2)]	**(CW)**	**Hydraulic cylinder**[2)]	**(MH)**
Ratchet wrench[2)]	**(RW)**		

[1)] *For recommended size, see page 5 column E*
[2)] *For recommended size, see separate data sheet*

Double-acting pneumatic cylinder			Electric motor – AUMA multi-turn		
Size valve (inch/mm)	Size EC	Maximum Force (lbs. force/kN)	Size valve (inch/mm)	AUMA	Attachment
3 - 6/80 - 150	**EC 100**	**787**/3.5	**3 - 6**/80 - 150	**SA 07.2**	**F10/A**
8 - 12/200 - 300	**EC 160**	**2023**/9.0	**8 - 10**/200 - 250	**SA 07.6**	**F10/A**
14 - 20/350 - 500	**EC 200**	**3170**/14.1	**12 - 24**/300 - 600	**SA 10.2**	**F10/A**
24/600	**EC 250**	**4968**/22.1			

The table above gives recommended cylinder sizes at normal operation with 5 bar air pressure. For other operating conditions, please contact Stafsjö or your local representative for advice.

Electric motors are mounted according to standard ISO 5210. The table above gives recommended motor sizes at normal operation.
For other operating conditions, please contact Stafsjö or your local representative for advice.

The actuators are described in detail in separate data sheets. For actuators classified according to ATEX, please contact Stafsjö or your local representative.

Options and accessories

Knife gate valve			
Accessories	Code	Model	Design
Mechanical limit switch	**(MLS)**	**Omron D4V**	**12-250 V AC/DC, IP 67**
Inductive limit switch	**(ILS)**	**ifm electronic IG0006**	**2-wire, 20-250 V AC/DC, IP 67**
		ifm electronic IG5401	**3-wire, 10-36 V DC PNP, IP 67**
Stem extension	**(SES)**	**Short**	**Pipe length: < 59”**/1.5 m
	(SEL)	**Long**	**Pipe length: > 59”**/1.5 m

Pneumatic cylinder			
Accessories	Code	Model	Design
Solenoid valve	**(SV)**	**Parker Namur valves for EC 100 - EC 160**	**G1/4”, Mono stable 5/2, Namur series VDI/VDE 3845, 24 V DC/110 V AC/220 V AC, IP 65**
		Parker Namur valves for EC 200 - EC 320	**G1/2”, Mono stable 5/2, Namur series VDI/VDE 3845, 24 V DC/110 V AC/220 V AC, IP 65**
Magnetic limit switch	**(MagLS)**	**KITA KT-50R for EC 100 - EC 320**	**2-wire, 5 -240 V AC/DC, IP 65**
		KITA KT-50N for EC 100 - EC 320	**3-wire, 10-30 V DC, IP 65**

The accessories are described in detail in separate data sheets. For accessories classified according to ATEX, please contact Stafsjö or your local representative.

Specify the Stafsjö valve

Stafsjö’s valves are modular designed and they can easily be customized with gate, seat and box packings according to media and requirements, as well for actuators and accessories. Below are examples of how you can specify your Stafsjö valve. Further information is available on www.stafsjo.com.

BV-A-200-E-TY-HW-ANSI

Valve type
Body material
Size
Sealing profile
Box packing
Actuator
Flange drilling

[8] *All electronics must be specified in detail.*

BV-A-200-E-TY-HW-ANSI-ILS-

Valve type
Body material
Size
Sealing profile
Box packing
Actuator
Flange drilling
Inductive limit switches
Solenoid valve

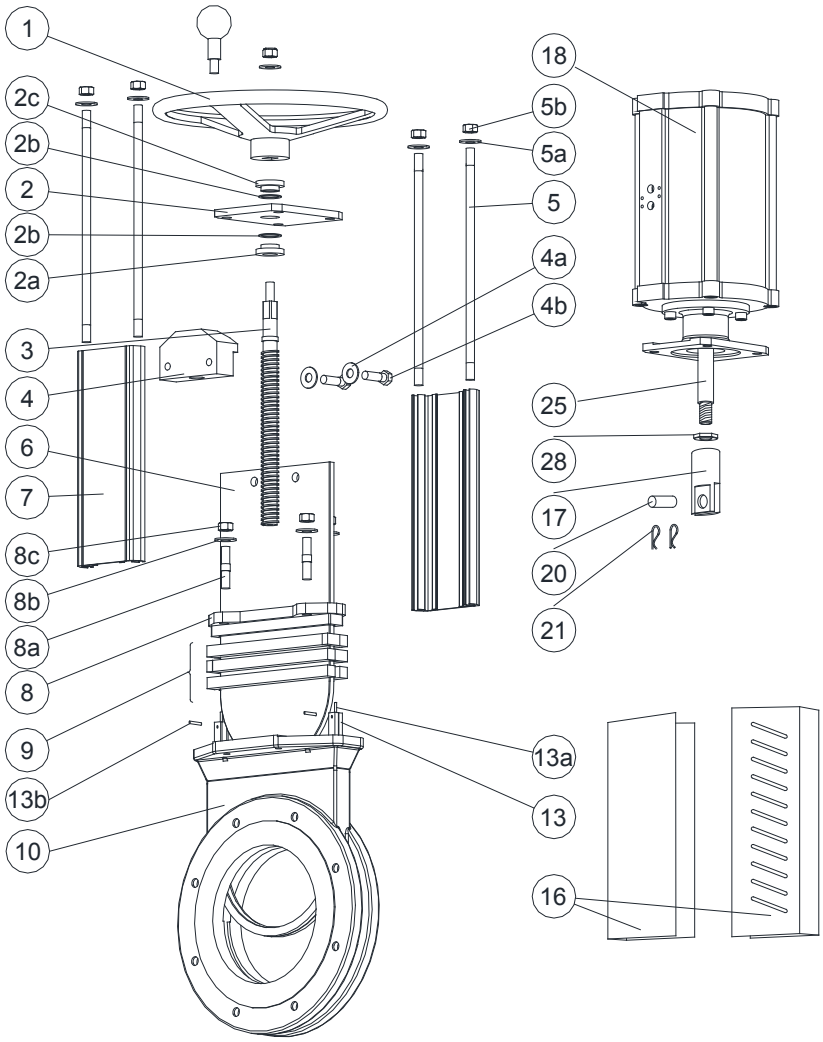

Part list

Pos	Part	Material (Name)
1	Hand wheel	Epoxy coated Ø 200 - Ø 315 Cast iron (GG25) ≥ Ø 400 Cast iron (GG20)
2	Yoke	Steel (1.0038/SS1312) epoxy coated
2a	Bearing	Brass (CuZn39Pb3/SS5170)
2b	Slide washer	POM
2c	Bearing	Brass (CuZn39Pb3/SS5170)
3	Stem	Stainless steel (1.4016/SS2320)
4	Stem nut	Brass (CW603N)
4a	Washer	Stainless steel (A2)
4b	Screw	Stainless steel (A2)
5	Tie rod	Stainless steel (1.4301/SS2333)
5a	Washer	Stainless steel (A2)
5b	Nut	Stainless steel (A2)
6	Gate	See equipment B
7	Beam	Aluminium (EN AW-6063-T6)
8	Gland	Nodular iron (GGG50), epoxy coated

Pos	Part	Material (Name)
8a	Stud bolt	Stainless steel + zinc coated (A2)
8b	Washer	Stainless steel (A2)
8c	Nut	Stainless steel + zinc coated (A2)
9	Box packing*	See equipment D
10	Valve body	See equipment A
13	Sealing profile*	See equipment C
13a	Pin, long*	Stainless steel (1.4301/SS2333)
13b	Pin, short*	Stainless steel (1.4301/SS2333)
16	Gate guard, not for HW	Stainless steel (1.4301/SS2333)
17	Gate clevis	Stainless steel (1.4305/SS2346)
18	Cylinder	See data sheet
20	Clevis pin	Stainless steel (1.4305/SS2346)
21	Split pin	Stainless steel (1.4436/SS2343)
25	Piston rod	Stainless steel (1.4104/SS2383)
28	Locking nut	Stainless steel (1.4305/SS2346)

** Recommended spare parts*

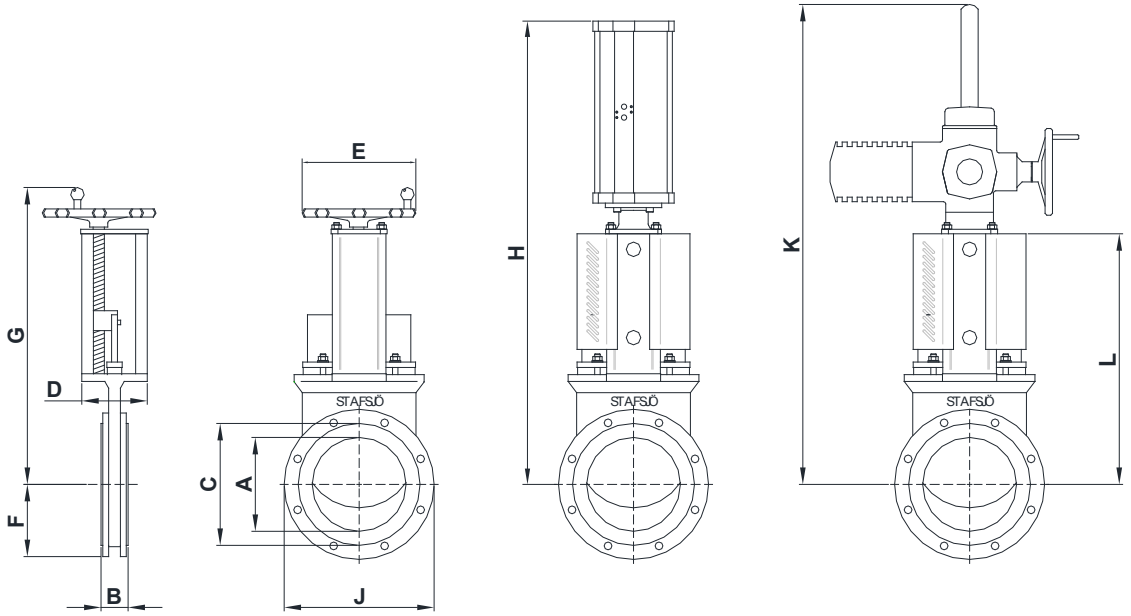

Main dimensions

Dimension (inch)												
Size	A	B	C	D	E	F	G	H	J	K	L	Weight lb*
3	**3.15**	**2.01**	**5.24**	**3.15**	**7.87**	**3.94**	**13.74**	**21.54**	**7.87**	**20.63**	**10.91**	**27**
4	**3.94**	**2.05**	**6.26**	**3.15**	**7.87**	**4.53**	**15.51**	**23.31**	**9.02**	**23.19**	**12.68**	**33**
5	**4.92**	**2.20**	**7.48**	**3.15**	**9.84**	**5.00**	**19.76**	**27.24**	**10.00**	**26.18**	**14.65**	**46**
6	**5.91**	**2.20**	**8.62**	**3.15**	**9.84**	**5.63**	**22.05**	**29.53**	**11.22**	**29.49**	**16.93**	**57**
8	**7.87**	**2.76**	**10.63**	**5.71**	**12.4**	**6.77**	**27.52**	**40.04**	**13.50**	**34.41**	**22.05**	**101**
10	**9.84**	**2.68**	**12.99**	**5.71**	**12.4**	**7.99**	**31.54**	**43.90**	**15.98**	**40.51**	**25.98**	**141**
12	**11.81**	**3.07**	**14.88**	**5.71**	**12.4**	**9.49**	**35.59**	**50.20**	**19.02**	**47.05**	**30.12**	**176**
14	**13.27**	**2.99**	**16.65**	**6.89**	**15.75**	**10.51**	**38.23**	**60.63**	**20.98**	**53.74**	**34.37**	**337**
16	**15.28**	**3.50**	**19.13**	**6.89**	**15.75**	**11.77**	**42.17**	**64.57**	**23.50**	**60.04**	**38.31**	**421**
18	**17.24**	**3.50**	**21.30**	**8.07**	**20.47**	**12.52**	**49.57**	**69.49**	**25.00**	**64.45**	**43.23**	**550**
20	**19.25**	**4.49**	**23.46**	**9.84**	**20.47**	**13.74**	**53.03**	**79.13**	**27.48**	**74.25**	**48.15**	**726**
24	**22.87**	**4.49**	**27.48**	**9.84**	**25.00**	**16.22**	**60.98**	**90.43**	**32.40**	**86.14**	**56.02**	**1119**
Dimension (mm)												
Size	A	B	C	D	E	F	G	H	J	K	L	Weight kg*
80	**80**	**51**	**133**	**80**	**200**	**100**	**349**	**547**	**200**	**524**	**277**	**12**
100	**100**	**52**	**159**	**80**	**200**	**115**	**394**	**592**	**229**	**589**	**322**	**15**
125	**125**	**56**	**190**	**80**	**250**	**127**	**502**	**692**	**254**	**665**	**372**	**21**
150	**150**	**56**	**219**	**80**	**250**	**143**	**560**	**750**	**285**	**749**	**430**	**26**
200	**200**	**70**	**270**	**145**	**315**	**172**	**699**	**1017**	**343**	**874**	**560**	**46**
250	**250**	**68**	**330**	**145**	**315**	**203**	**801**	**1115**	**406**	**1029**	**660**	**64**
300	**300**	**78**	**378**	**145**	**315**	**241**	**904**	**1275**	**483**	**1195**	**765**	**80**
350	**337**	**76**	**423**	**175**	**400**	**267**	**971**	**1540**	**533**	**1365**	**873**	**153**
400	**388**	**89**	**486**	**175**	**400**	**299**	**1071**	**1640**	**597**	**1525**	**973**	**191**
450	**438**	**89**	**541**	**205**	**520**	**318**	**1259**	**1765**	**635**	**1637**	**1098**	**250**
500	**489**	**114**	**596**	**250**	**520**	**349**	**1347**	**2010**	**698**	**1886**	**1223**	**329**
600	**581**	**114**	**698**	**250**	**635**	**412**	**1549**	**2297**	**823**	**2188**	**1423**	**508**

[1] Weight for Valve incl. hand wheel (HW).
Main dimensions are only for information. Contact Stafsjö for certified drawings.

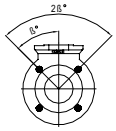

3”/
80 mm

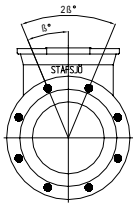

4” - 8”/
100 mm - 200 mm

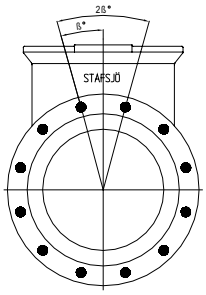

10” - 14”/
250mm - 350 mm

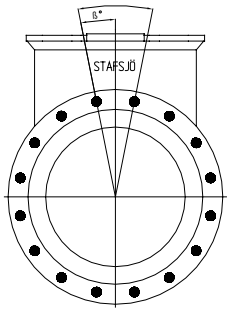

16” - 18”/
400mm - 450 mm

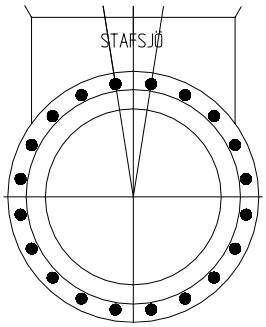

20” - 24”/
500 mm - 600 mm

Flange drilling according to ASME/ANSI B16.5 Class 150

Flange drilling information (inch)												
Size	3	4	5	6	8	10	12	14	16	18	20	24
Outside flange diameter	**7.50**	**9.00**	**10.00**	**11.00**	**13.50**	**16.00**	**19.00**	**21.00**	**23.50**	**25.00**	**27.50**	**32.00**
Bolt cirlce diameter	**6.00**	**7.50**	**8.50**	**9.50**	**11.75**	**14.25**	**17.00**	**18.75**	**21.25**	**22.75**	**25.00**	**29.50**
Number of throughgoing bolts (○)	**-**	**-**	**-**	**-**	**-**	**-**	**-**	**-**	**-**	**-**	**-**	**-**
Number of tapped holes/side (•)	**4**	**8**	**8**	**8**	**8**	**12**	**12**	**12**	**16**	**16**	**20**	**20**
Bolt size (UNC)	**5/8-11**	**5/8-11**	**3/4-10**	**3/4-10**	**3/4-10**	**7/8-9**	**7/8-9**	**1-8**	**1-8**	**1 1/8-7**	**1 1/8-7**	**1 1/4-7**
β°	**45**	**22.5**	**22.5**	**22.5**	**22.5**	**15**	**15**	**15**	**11.25**	**11.25**	**9**	**9**
Screw lengths[1)]	**0.47**	**0.55**	**0.63**	**0.55**	**0.63**	**0.63**	**0.71**	**0.67**	**0.71**	**0.71**	**0.87**	**0.87**

Flange drilling information (mm)												
Size	80	100	125	150	200	250	300	350	400	450	500	600
Outside flange diameter	**190.5**	**228.6**	**254.0**	**279.4**	**342.9**	**406.4**	**482.6**	**533.4**	**596.9**	**635**	**698.5**	**812.8**
Bolt cirlce diameter	**152.4**	**190.5**	**215.9**	**241.3**	**298.4**	**361.9**	**431.8**	**476.3**	**539.8**	**577.9**	**635**	**749.3**
Number of throughgoing bolts (○)	**-**	**-**	**-**	**-**	**-**	**-**	**-**	**-**	**-**	**-**	**-**	**-**
Number of tapped holes/side (•)	**4**	**8**	**8**	**8**	**8**	**12**	**12**	**12**	**16**	**16**	**20**	**20**
Bolt size (UNC)	**5/8-11**	**5/8-11**	**3/4-10**	**3/4-10**	**3/4-10**	**7/8-9**	**7/8-9**	**1-8**	**1-8**	**1 1/8-7**	**1 1/8-7**	**1 1/4-7**
β°	**45**	**22.5**	**22.5**	**22.5**	**22.5**	**15**	**15**	**15**	**11.25**	**11.25**	**9**	**9**
Screw lengths[1)]	**12**	**14**	**16**	**14**	**16**	**16**	**18**	**17**	**18**	**18**	**22**	**22**

[1)] Add the values with the thickness of the pipe flanges, the washers and the estimated thickness of the gasket.

○ *Throughgoing holes*

• *Tapped holes*

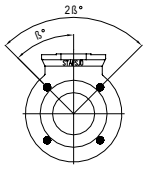

3” - 4”/
80 mm - 100 mm

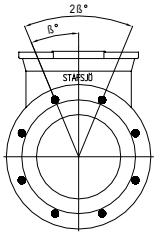

6” - 10”/
150 mm - 250 mm

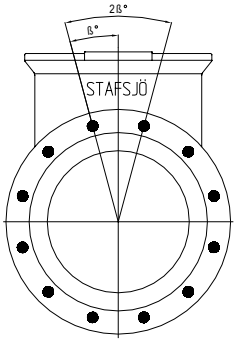

12” - 18”/
300 mm - 450 mm

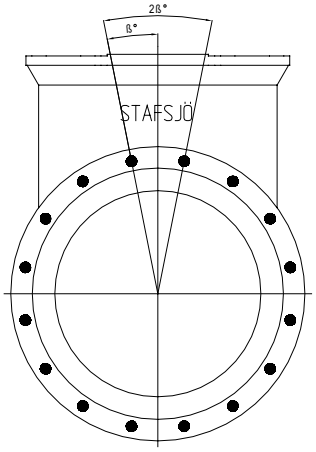

20” - 24”/
500 mm - 600 mm

Flange drilling according to AS 2129 Table D

Flange drilling information (inch)											
Size	3	4	6	8	10	12	14	16	18	20	24
Outside flange diameter	**7.28**	**8.46**	**11.02**	**13.19**	**15.94**	**17.91**	**20.67**	**22.83**	**25.20**	**27.76**	**32.48**
Bolt cirlce diameter	**5.75**	**7.01**	**9.25**	**11.50**	**14.02**	**15.98**	**18.50**	**20.51**	**22.99**	**25.24**	**29.76**
Number of throughgoing bolts (○)	**-**	**-**	**-**	**-**	**-**	**-**	**-**	**-**	**-**	**-**	**-**
Number of tapped holes/side (•)	**4**	**4**	**8**	**8**	**8**	**12**	**12**	**12**	**12**	**16**	**16**
Bolt size	**M16**	**M16**	**M16**	**M16**	**M20**	**M20**	**M24**	**M24**	**M24**	**M24**	**M27**
β°	**45**	**45**	**22.5**	**22.5**	**15**	**15**	**15**	**15**	**15**	**11.25**	**11.25**
Screw lengths[1)]	**0.47**	**0.55**	**0.55**	**0.63**	**0.63**	**0.71**	**0.67**	**0.71**	**0.71**	**0.87**	**0.87**

Flange drilling information (mm)											
Size	80	100	150	200	250	300	350	400	450	500	600
Outside flange diameter	**185**	**215**	**280**	**335**	**405**	**455**	**525**	**580**	**640**	**705**	**825**
Bolt cirlce diameter	**146**	**178**	**235**	**292**	**356**	**406**	**470**	**521**	**584**	**641**	**756**
Number of throughgoing bolts (○)	**-**	**-**	**-**	**-**	**-**	**-**	**-**	**-**	**-**	**-**	**-**
Number of tapped holes/side (•)	**4**	**4**	**8**	**8**	**8**	**12**	**12**	**12**	**12**	**16**	**16**
Bolt size	**M16**	**M16**	**M16**	**M16**	**M20**	**M20**	**M24**	**M24**	**M24**	**M24**	**M27**
β°	**45**	**45**	**22.5**	**22.5**	**22.5**	**15**	**15**	**15**	**15**	**11.25**	**11.25**
Screw lengths[1)]	**12**	**14**	**14**	**16**	**16**	**18**	**17**	**18**	**18**	**22**	**22**

[1)] Add the values with the thickness of the pipe flanges, the washers and the estimated thickness of the gasket.

○ *Throughgoing holes*

• *Tapped holes*

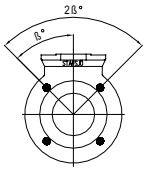

3”
80 mm

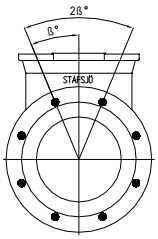

4” - 8”/
100 mm - 200 mm

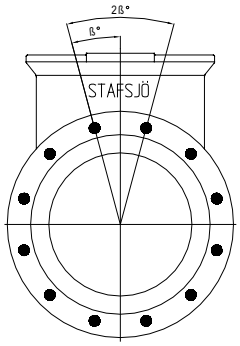

10” - 16”/
250mm - 400 mm

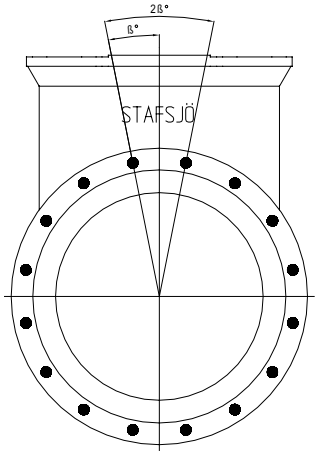

18” - 24”/
450 mm - 600 mm

Flange drilling according to AS 2129 Table D E

Flange drilling information (inch)											
Size	3	4	6	8	10	12	14	16	18	20	24
Outside flange diameter	**7.28**	**8.46**	**11.02**	**13.19**	**15.94**	**17.91**	**20.67**	**22.83**	**25.20**	**27.76**	**32.48**
Bolt cirlce diameter	**5.75**	**7.01**	**9.25**	**11.50**	**14.02**	**15.98**	**18.50**	**20.51**	**22.99**	**25.24**	**29.76**
Number of throughgoing bolts (○)	**-**	**-**	**-**	**-**	**-**	**-**	**-**	**-**	**-**	**-**	**-**
Number of tapped holes/side (•)	**4**	**8**	**8**	**8**	**12**	**12**	**12**	**12**	**16**	**16**	**16**
Bolt size	**M16**	**M16**	**M20**	**M20**	**M20**	**M24**	**M24**	**M24**	**M24**	**M24**	**M30**
β°	**45**	**22.5**	**22.5**	**22.5**	**15**	**15**	**15**	**15**	**11.25**	**11.25**	**11.25**
Screw lengths[1)]	**0.47**	**0.55**	**0.55**	**0.63**	**0.63**	**0.71**	**0.67**	**0.71**	**0.71**	**0.87**	**0.87**

Flange drilling information (mm)											
Size	80	100	150	200	250	300	350	400	450	500	600
Outside flange diameter	**185**	**215**	**280**	**335**	**405**	**455**	**525**	**580**	**640**	**705**	**825**
Bolt cirlce diameter	**146**	**178**	**235**	**292**	**356**	**406**	**470**	**521**	**584**	**641**	**756**
Number of throughgoing bolts (○)	**-**	**-**	**-**	**-**	**-**	**-**	**-**	**-**	**-**	**-**	**-**
Number of tapped holes/side (•)	**4**	**8**	**8**	**8**	**12**	**12**	**12**	**12**	**16**	**16**	**16**
Bolt size	**M16**	**M16**	**M20**	**M20**	**M20**	**M24**	**M24**	**M24**	**M24**	**M24**	**M30**
β°	**45**	**22.5**	**22.5**	**22.5**	**15**	**15**	**15**	**15**	**11,25**	**11,25**	**11,25**
Screw lengths[1)]	**12**	**14**	**14**	**16**	**16**	**18**	**17**	**18**	**18**	**22**	**22**

[1)] Add the values with the thickness of the pipe flanges, the washers and the estimated thickness of the gasket.

○ Throughgoing holes

• Tapped holes

Further information is available on www.stafsjo.com

Globally active. Locally represented.

AFRICA South Africa: Valve & Automation (Pty) Ltd, **ASIA** China: EBRO ARMATUREN (BEIJING) CO., LTD, India: Ebro Armaturen India Pvt. Ltd, Indonesia: Contromatic Prima Mandiri PT, Japan: SKC Co. Ltd, Malaysia: Precision Control SdnBnd, Philippines: EBRO ARMATUREN (PHILIPPINES) INC., Thailand: EBRO VALVES (Trading) Co. Ltd., Vietnam: EBRO VALVES (Thailand) Co., Ltd, **AUSTRALIA WITH OCEANIA** Australia: EBRO ARMATUREN Pacific PTY. LTD, New Zeeland: H.J.Asmuss&Co.Ltd, **EUROPE** Austria: EBRO ARMATUREN GmbH, Belgium: V.C.T. - Valve & Connector Technology n.v., Denmark: Valtor Industri A/S, Finland: Tecalemit Flow Oy, France: EBRO ARMATUREN and GL&V, Germany: EBRO ARMATUREN Gebr. Bröer GmbH, Great Britain: EBRO Valves Ltd, Hungary: EBRO ARMATUREN Kft, Ireland: Induchem Components Ltd, Iceland: Hédinn HF, Italy: EBRO VALVOLE SRL, The Netherlands: EBRO VALVES B.V., Norway: BAGGES AS, Poland: EBRO ARMATUREN GmbH, Portugal: AxFlow Comércio de Aquipamentos LDA, RUSSIA/BELARUS/UKRAINE: EBRO ARMATUREN and LesBumMash Ltd, Spain: EBRO ARMATUREN ESPAÑA, S.L., Switzerland: EBRO Armaturen Est. & Co. KG, Sweden: Stafsjö Valves AB and Ahlsell, Turkey: EBRO ARMATUREN Otomasyon Sistemleri San ve Tic Ltd. Sti **NORTH & SOUTH AMERICA** Argentina: ESCO ARGENTINA S.A, Brazil: Ebro Stafsjö Valves do Brasil LTD, Canada: Armour Valve Ltd, Chile: Ebro Stafsjö Valves Chile Ltd, USA: EBRO ARMATUREN USA Inc., For other countries, please contact us directly.

Stafsjö
SINCE 1666

Stafsjö Valves AB. SE-618 95 Stavsjö, Sweden. Tel: +46 (0)11-39 31 00. Fax: +46 (0)11-39 30 67. info@stafsjo.se www.stafsjo.com
A Bröer Group company